NOR820 Fitting Instructions

Tools

Included:
1 x NOR820 Automatic drop seal
1 x Aluminium cover plate
1 x Actuator plate
Fixing screws

All dimensions in mm

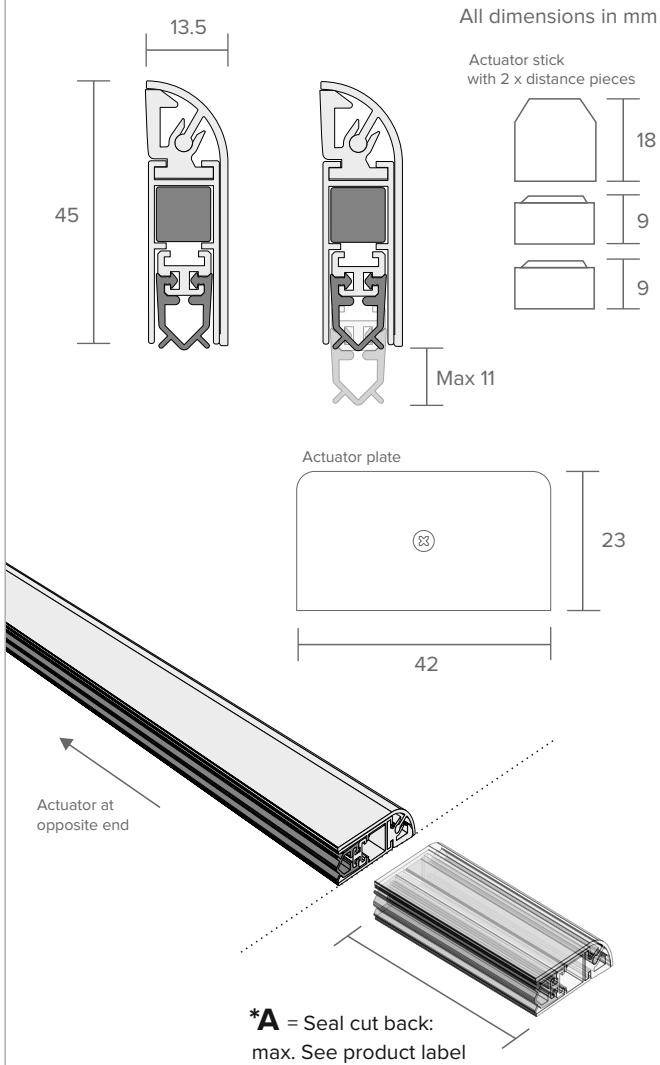

1

1.1

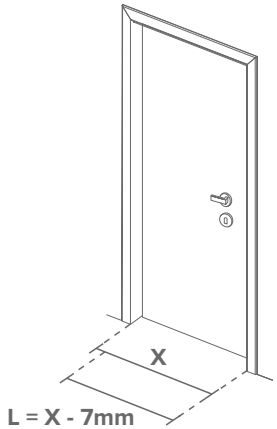

1.2

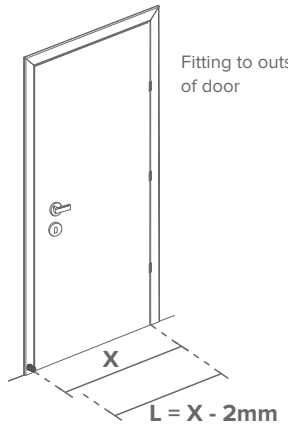

X = Length of door

1.1 If fitting to the inside of the door, measure the distance between the two door stops (x). Calculate L by taking 7mm from this measurement and make a note of it for step 2.

1.2 If fitting to the outside of the door, measure the distance between where the actuator contact screw will be (see 5.1) and the hanging side edge of the door (x). calculate L by taking 2mm from this measurement and make a note of it for step 2.

2

2.1

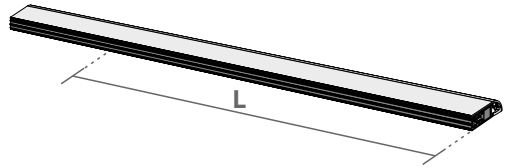

2.2

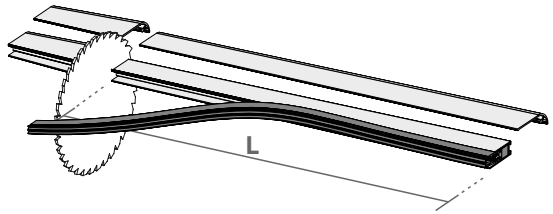

2.3

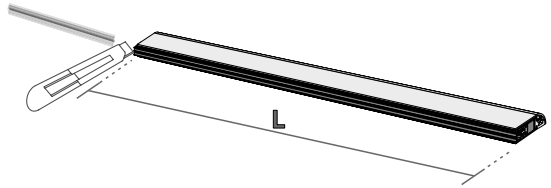

2.1 Take measurement L and mark it on both cover plate and drop seal, making sure to measure from the actuator end.

2.2 Using this mark as a guide, remove the aluminium cover plate and remove seal where necessary and cut the aluminium sections of the product with a saw.

2.4 Carefully file the cut edge to remove any rough aluminium to avoid catching between the drop seal and cover plate.

2.5 Place the seal back into the inner carrier section and cut any excess seal using a sharp knife.

NOR820 Fitting Instructions

3

3.1

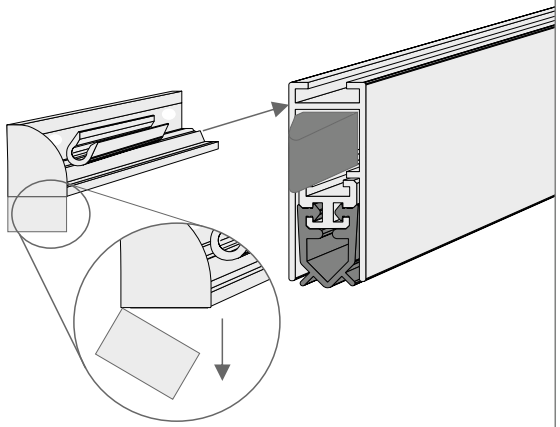

3.2

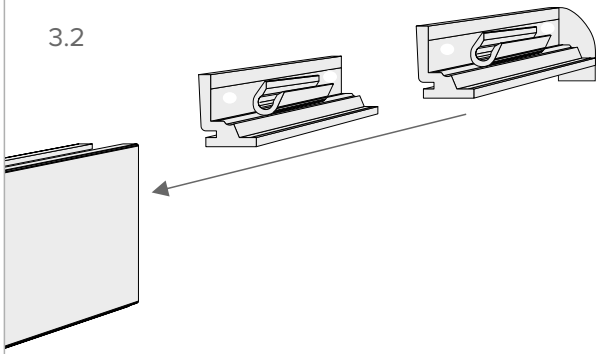

3.1 Take one of the plastic pieces and push it into the inner section. This plastic piece can be used either way round depending on which side of the door the product is fitted. Remove the small plastic piece that obstructs the actuator.

3.2 Push the two plastic pieces into the other end of the product, starting with the middle section and sliding it to a central position.

4

4.1

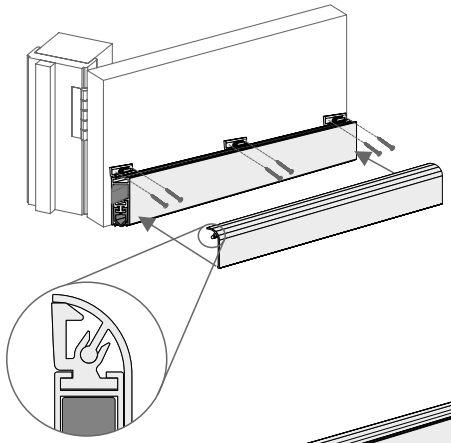

4.2

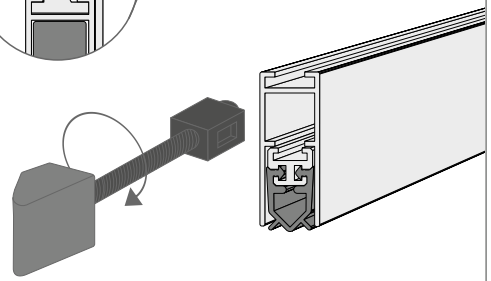

4.3

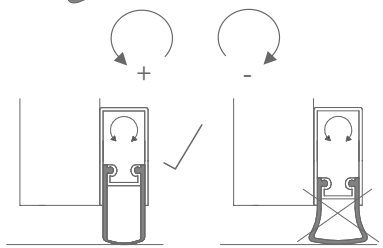

4.1 Fit the product flush to the door bottom by using the screws provided to fix through the holes in the plastic pieces. Once the product is attached to the door, clip the cover plate on top using the fixing method shown.

4.2 The actuator can be removed and switched to face the other way. Make sure that the actuator is in the correct position to close against the frame.

4.3 By hand, twist the actuator anti-clockwise to increase seal travel (if the seal does not fully cover the gap) or twist it clockwise to reduce seal travel (in order to avoid squashing the seal).

5

5.1

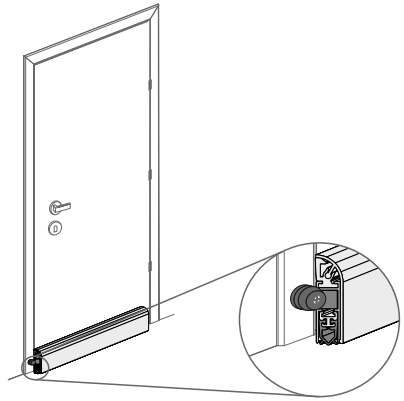

5.2

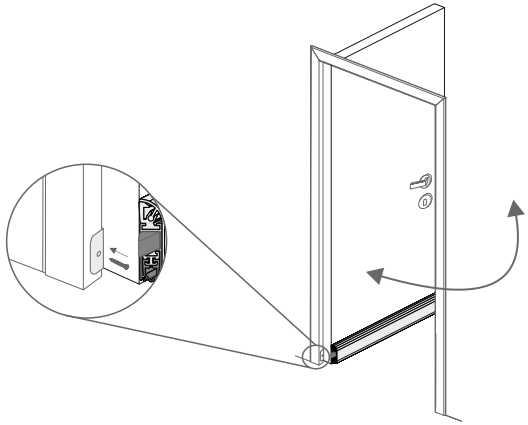

5.1 If fitting to the outside of the door, make sure to fit the actuator stick to the door frame so that when the door closes, the actuator contacts with it and drops the seal. Ensure correct contact using optional distance pieces.

5.2 Scew fix actuator plate to door frame as shown. Open and close the door to test that the seal drops correctly. Repeat step 4.3 and test again if further adjustment required.

For copy fitting instructions visit norsound.com/fitting