CERTIFICATION SCHEDULE FOR

APOLLO LITE 30:30 Vertical Non Rigid Fire Barrier

SINGLE FABRIC SECTION

Fire Resistance Period	Max Assembly Dimensions (Height x Width)
60 min	8000mm x 1000mm
83 min	7000mm x 1000mm
90 min	4500mm x 1000mm
113 min	3000mm x 1000mm
120 min	1500mm x 1000mm

MULTIPLE FABRIC SECTIONS

Fire Resistance Period	Max Assembly Dimensions (Height x Width)
60 min	8000mm x 8000mm
83 min	7000mm x 8000mm
90 min	4500mm x 8000mm
113 min	3000mm x 8000mm
120 min	1500mm x 8000mm

The maximum assembly dimensions can be increased, providing that at the point of extension there is a suitable load bearing, fire resistant supporting framework. The barrier should then be joined over the supporting framework as per our approved detail.

SERVICE PENETRATIONS The following service penetrations are permitted:

Penetrating Service	Penetrating Sealing System
Steel pipe	Protected on the fire side for a distance of 300mm by a length of the barrier material wrapped the pipe. The barrier is butt jointed and stitched together with a double row of 11mm long steel staples at 50mm centres. A collar, formed from the fabic, is wrapped around the penetration and formed with a, staple fixed, folded back joint and bonded to the exposed face of the barrier using Firefly™ high temperature adhesive.
PE pipe	110mm FSI pipebloc PCP Collar on both faces. Collar supported by the upper perimeter channel, using 50mm steel channel.
PVC pipe	Intumescent collar, referenced Albiclasp T/100/2, fixed to the face of the barrier and independently supported.
Steel cable tray with cables	Intumescent collar, referenced Albiclasp M/150/110/2, fixed to the face of the barrier and independently supported.
Steel cable tray with cables	Protected on the exposed face, for a distance of 300mm, by a length of the barrier, laid onto the cable trays. Fabric wrapped around, butt jointed and stitched together with a double row of 11mm long steel staples, at 50mm centres.
Steel cable tray with cables	Protected on the exposed face, for a distance of 300mm, by a length of the barrier, laid onto the cable trays. Fabric wrapped around and joined with a folded back joint, nominally 25mm wide, stitched together with a single row of 11mm long steel staples at 50mm centres.
Timber strut	Firefly™ protective collar on exposed and unexposed faces. Timber strut is indepentently supported.
Steel trunking	Close fitting collar formed from the barrier material and sealed internally using a single Albishield 115 intumescent pillow. Pillows are to be provided on the line of the fabric barrier.

Cable Trays
Multi-core 'power' cables including copper conductors and sheathed with PVC; with steel wire armour
Multi-core cables, including copper conductors and sheathed with PVC
Multi-core cables, including copper conductors and sheathed with PVC; with metallic sheet barrier. ('Fire cable')
network/telecommunications cables

Limitations
All penetrations must be independently supported from the non-rigid fire barrier assembly. Support must provide adequate restraint to the penetration/sealing system such that the curtain barrier and penetration sealing system are not adversely affected by any deflections experienced under fire conditions. This product is undergoing continuous further testing and assessment for fixing into steel and timber. This will allow for application and certification in both the vertical and horizontal planes.

IFC Certification Ltd
Tel: +44(0) 1844 275500
Fax: +44(0) 1844 274002
Email: info@ifccertification.com
Web: www.ifccertification.com

Apollo Lite 30:30
IFCC 1461
BS476: Parts 20/22:1987

T: 01706 758817
E: info@tbafirefly.co.uk

Top Fix

PRE-DRILL ANGLE AT 250MM CENTRES WHEN FIXING INTO CHANNEL

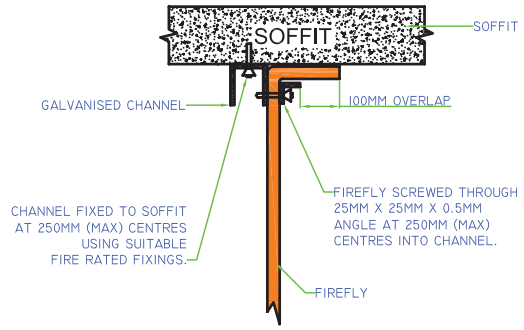

ANGLE TO CHANNEL METHOD

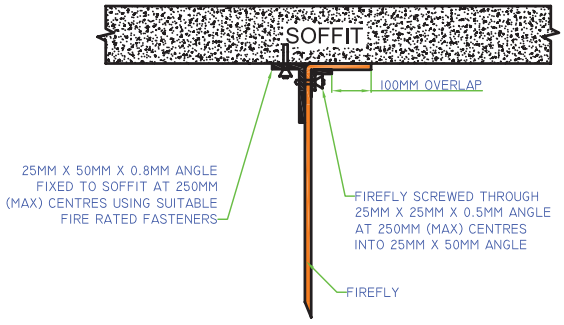

ANGLE TO ANGLE METHOD

DO NOT SCALE
IF IN DOUBT ASK!

Bottom Fix

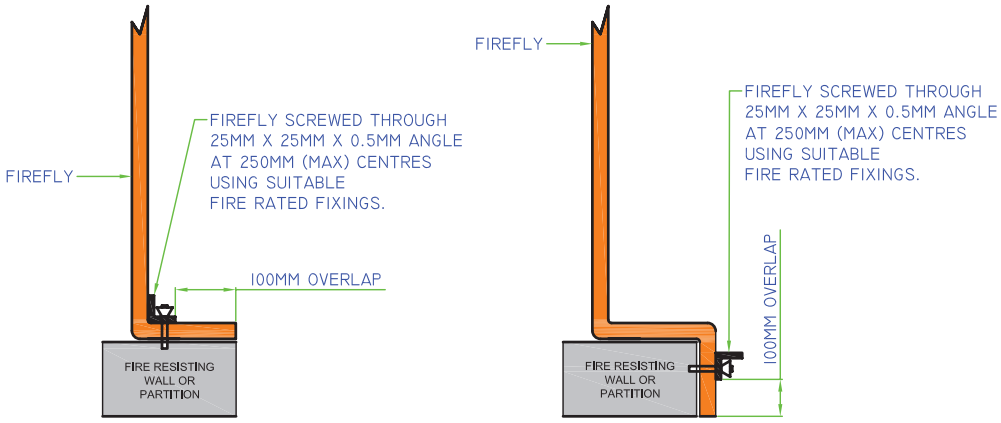

FIREFLY CAN BE SECURED USING EITHER METHOD SHOWN ENSURING THAT THERE IS A 100MM OVERLAP

Side Fix

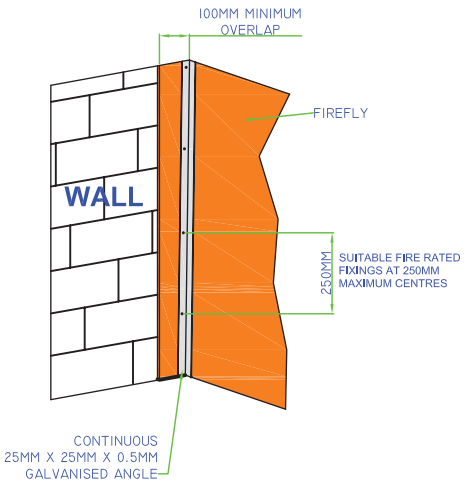

Collared Pipe Penetration

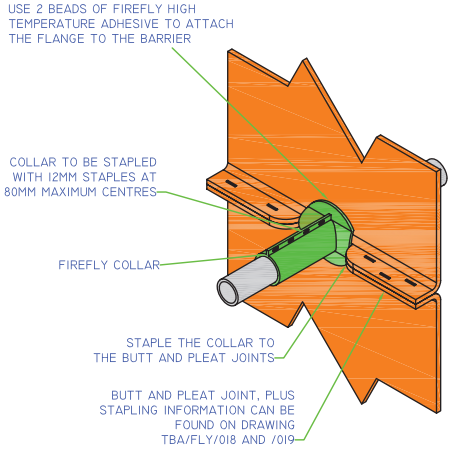

Butt Joint

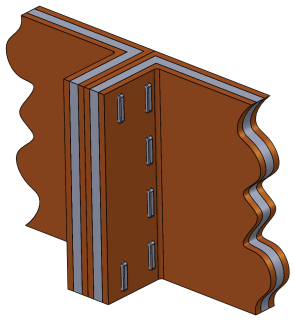

All details to be taken from the FIREFLY™ Standard Installation Manual.

All drawings available as controlled documents from our website.

Firefly™