Nullifire
Smart Protection

Application Guidance

For FF197 Fire Rated PU Construction Foam

Construction
Products Group
Europe

Intelligent Engineered Passive Fire Protection

We are specialists, with one focus that has not and will not change – to protect people and buildings from fire. For nearly 50 years, Nullifire has been a market leader in the Passive Fire Protection industry. We pride ourselves for being the only manufacturer offering intumescent and fire stopping solutions.

Passive fire protection is highly complex but crucially important, especially as buildings become more sophisticated. At Nullifire, we understand the need to have confidence in fire protection; so, we provide systems that perform when they are called upon.

With a unique team of technical experts, everything is focused on providing what our customers need at every stage of their project – smart protection.

Nullifire is a brand of CPG, Construction Products Group, a European manufacturer and service provider of high performance building materials.

Contents

2 Intelligent Engineered Passive Fire Protection
3 Contents & Contact
4 Document Overview
5 Product Overview
6 Intended Use
8 Technical Detail

General
54 Testing & Certification
55 Tremco CPG UK and Its' Trusted Brands

Assistance When Required

Our targeted approach allows you to access answers to all of your questions - quickly, simply and for at any stage of the design, build and installation process.

Regardless of the complexity of a project, you can turn to the team here at Nullifire. Our trained expert team support architects, specifiers, main contractors and installers in product selection, specification writing and industry best practices. Involving us at the early stages of a project can help you save money and time, as well as the assurance that the products selected are fully compatible and ideal for the job at hand.

Whilst choosing the right product is vitally important, the application is equally as critical. To optimise this process, we are able to supply the field teams data on formulations, installation specifications and technical drawings to ensure the correct application of our products. Bespoke manuals and instructions can be prepared by our technical teams for specific situations. Our extensive online and face-to-face training ensures Nullifire products are applied professionally and efficiently, whilst giving installers and contractors access to new technologies and solutions.

All of our product data-sheets,technical notes and additional product information can be downloaded from www.nullifire.com.

Technical
Fire Stopping:
01942 929 040

Introduction

Fire doors play an integral role in a buildings passive fire protection. Ensuring the right products and foams are specified and installed is crucial. In the event of a fire, using the wrong product or one that is untested, could result in smoke or fire entering buildings, flats, or corridors potentially resulting in injury or death.

Nullifire provides a wide range of passive fire protection solutions which are rigorously tested to ensure compliance to the latest building regulations, as well as peace of mind to architects, contractors and building owners.

Nullifire FF197 is a tried and tested fire foam solution for sealing door frames, window frames, and linear gaps throughout the fire rated areas of a building. It is easy to apply, tack free in just 10 minutes, and meets the requirements for FD30, FD60, and FD120. Plus, only generic plastic and wood packers, rather than the special intumescent versions, are required when fixing the door frame and using Nullifire FF197.

The foam will adhere to most common substrates, including masonry, plaster, or timber. It cures within an hour (depending on ambient conditions) to form a semi-rigid foam that can accommodate some degree of movement of the joint, whilst sealing gaps to resist smoke and fire. The product has been smoke control and fire resistance tested and can even provide up to 30 minutes fire resistance on softwood stud wall door sets.

It's critical to make sure that the products being used and specified around fire doors are properly tested, meet all the required specifications and regulations, and that they provide an appropriate resistance time.

This document explores the technical benefits to selecting Nullifire FF197 and aims to simplify technical details, ensuring that the market is confidently selecting fire door protection solutions.

FF197

Fire Rated PU Construction Foam

up to 240 mins

A moisture-curing foam that can provide up to 4 hours fire integrity to openings in masonry construction

Description

FF197 is a modified, single component, fire rated polyurethane foam. Used to seal door frames, window frames and linear gaps throughout the fire rated areas of a building.

Features & Benefits

- Tested to BS EN 1634-1 (fire door) : FD60 performance achieved
- Tested to BS EN 1366-4 (linear gaps): up to 4 hours fire resistance
- Cures to form a semi-rigid foam that is able to accommodate some degree of movement of the joint
- Acts as an effective fire seal for up to 4 hours (BS EN 1366-4) when used with Intumastic (FS702) intumescent acrylic or Intusil (FS703) silicone sealant and installed in full accordance to our tested solutions and recommendations.

Specification

Supplied in 750 ml aerosol containers (12 per box)
Colour: grey

ETA 20/1338

APPROVED PRODUCT
CF5325

Intended Use

Due to our testing regime, there are specific elements of construction where Nullifire FF197 can confidently be used. These elements are outlined below, if you have any additional area of application, please contact our technical team ahead of installation.

Flexible Walls

Walls must have a minimum thickness of 70mm and comprise steel or timber studs. Studs should be lined on both faces with a minimum 1 layer of 12.5mm thick boards.

Openings do not need to lined prior to the installation of the door frame.

Rigid Walls

Walls must have a minimum thickness of 100mm for 30 and 60 minute door sets, or 150mm for a 120mm door set. Rigid walls can be constructed from either masonry or concrete to comply with testing.

Softwood Frames

Suitable for 30 minute door sets, softwood frames can be constructed from either softwood with a minimum density of 450kg/m^3 or MDF. When constructed by MDF a minimum thickness of 70mm must be achieved.

Hardwood Frames

Suitable for 60 minute and 120 minute door sets. Hardwood frames must have a minimum density of 620kg/m^3.

Linear Gaps

Suitable for 100mm and 150mm thickness linear gaps when used in conjunction with Nullifire FS702 Intumastic and Nullifire FS703 Fire Rated Silicone.

Additional Notes

In all application areas, plastic or timber packers should be used. No special packers are required.

Technical Detail

Installation Instructions:

1. Ensure within aperture is clean and free of debris, loose cement, and remove all dust from surfaces requiring installation.
2. For option 1, install FF197 to full depth of frame. For option 2, install either fire rated or builders' foam (as a backing material) allowing a minimum of 17.5mm depth to each face and install FS702 Intumastic (FS703 Fire Resistant Silicone Sealant instead if exposed to UV).
3. Clean excess FS702 Intumastic or FS703 Fire Resistant Silicone Sealant with a damp cloth.
4. Install architrave.

   Backing Material can be rock fibre, PU rod, or foam (builders or fire rated).

Detail 1 Limitations

Max span 35mm

Minimum span - where full fill can be achieved.

Detail 2 Limitations

Max span 35mm

Minimum span—where minimum depth of 17.5mm of mastic can be achieved with foam/ backing rod present or standard builders foam.

1 EI60

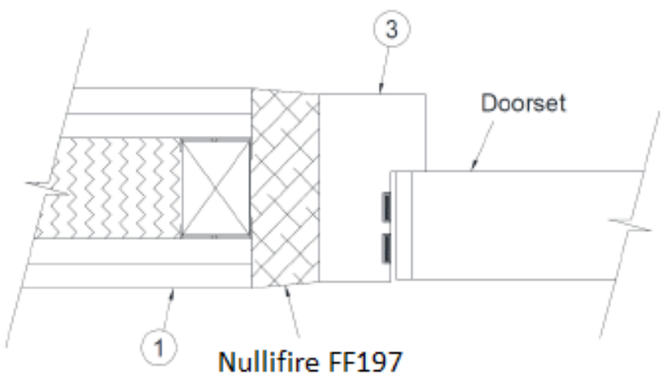

TYPICAL SECTION
THROUGH SEAL B
ALONG LATCHED JAMB OF DOORSET

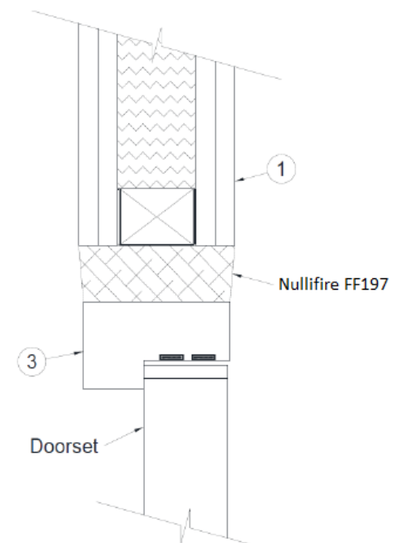

TYPICAL SECTION
THROUGH SEAL B
ACROSS THE HEAD OF DOORSET

2 EI120

3mm FS703 Fire Resistant Silicone Sealant coating to both sides if exposed to UV.

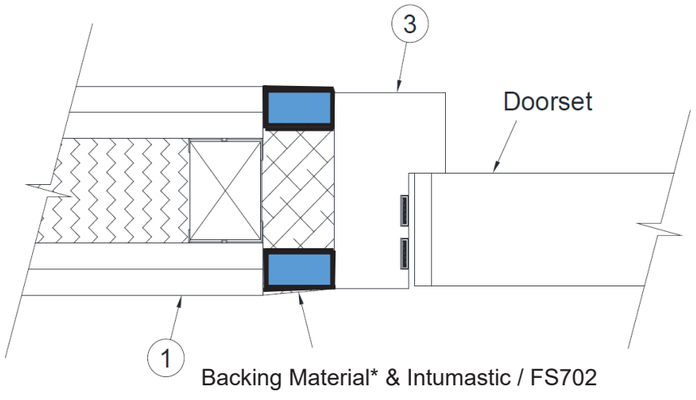

TYPICAL SECTION
THROUGH SEAL B
ALONG LATCHED JAMB OF DOORSET

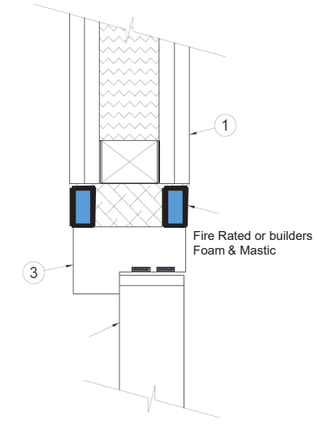

TYPICAL SECTION
THROUGH SEAL B
ACROSS THE HEAD OF DOORSET

Additional Notes:

The published fire ratings have been achieved by following the instructions set out above. Use of alternative components or deviations from the instructions in any way will remove Firetherm from any design liability. Firetherm will accept no responsibility for the consequences of using Firetherm products in applications or for the pur-poses not authorised by Nullifire. Expert advice should be sought where such applications are contemplated. The Information contained within this drawing is believed to be correct on the date of publication, and is based upon tested and certified solutions. The policy of Nullifire is one of constant improvement. Installers must therefore ensure that they are following the latest published drawings and instructions. Whilst Nullifire will endeavour to keep its publications up to date, the accuracy of the information contained within this drawing may be affected by pertinent changes in the law or regula-tory requirements and alterations or amendments to the specification of Nullifire products.

The published fire ratings have been achieved by following the instructions set out above. Use of alternative components or deviations from the instructions in anyway will remove Nullifire from any design liability. Nullifire will not accept responsibility for the consequences of the using our products in applications or purposes not authorised by Nullifire. Expert advise should be sought where such applications are contemplated.
The information contained within this drawing is believed to be correct on the date of publication, and is based upon tested and certified solutions. The policy of Nullifire is one of constant improvement. Installers must therefore ensure that they are following the latest published drawings and instructions. Whilst we will endeavour to keep our publications up to date, the accuracy of the information contained within this drawing may be affected by pertinent changes in the law or regulatory requirements and alternations/amendments to the specification of Nullifire products.

Test Information:

Standard (Ref):	BS 476 parts 20-22 BS EN 1634-1
Products:	FF197 FIRE RATED PU FOAM, FS702 INTUMASTIC, FS703 FIRE RESISTANT SILICONE SEALANT
Fire Resistance:	Detail 1- (Tested) Integrity (E) 60 mins Insulation (I) 60 mins Detail 2-(UL Assessment) Integrity (E) 120 mins Insulation (I) 120 mins

Client and Job Title:

Drawing Title:

FIRE SEALING DOOR FRAMES

Drawing Reference No:

TI-BG-V1507

Additional Information:

Scale: NTS

Date: January 2021

Sheet Size: A3

Drawn By:

Drawing No:

Rev: 1.1

Construction Products Group Europe

Testing & Certification

Able to assist with a comprehensive selection of passive fire protection products, Nullifire's product portfolio gives architects, specifiers, and contractors the ability to achieve fire protection requirements within any building structure.

Working closely with our in-house technical team, 3rd party accredited installers can deliver the best possible and most cost-effective fire protection solution, without compromising on quality or safety.

As the sole manufacturer to offer both intumescent coatings and fire stopping products, we are uniquely positioned to offer a full package to suit all project requirements. Nullifire's passive fire protection products, in combination with technical support and expert advice, gives all parties peace of mind and assurance of local building code compliance.

Our passive fire protection products undergo initial validation assessments at our in-house facilities prior to undergoing rigorous independent 3rd party testing with leading UKAS test houses, resulting in the following accreditations:

- **BS476 Pt20, 21, 22, 25**
- **BS EN 1366-3/4**
- **EN13501-2:2007**
- **EAD 350454-00-1104**
- **CE Marking**
- **Certifire**
- **UL EU Classification**

Nullifire, as part of CPG UK is an active participant in BSI standards, CEN working groups and the ASFP.

CPG UK products are manufactured to rigid standards of quality. Any product which has been applied (a) in accordance with CPG UK written instructions and (b) in any application recommended by CPG UK , but which is proved to be defective, will be replaced free of charge.
No liability can be accepted for the information provided in this leaflet although it is published in good faith and believed to be correct.
CPG UK Limited reserves the right to alter product specifications without prior notice, in line with Company policy of continuous development and improvement.

CPG Europe manufactures high performance building materials in order to solve the complex challenges faced by today's construction industry. With over 1,400 employees across Europe, we are committed to shaping a world where buildings and structures save energy, last longer and exceed sustainability benchmarks.

Delivering World-Class Construction Product Solutions.

The product brands housed within CPG Europe cover a wide array of different construction needs and provide a wealth of complex services, support and systems that are rarely found together under one roof.

Window Insulation, Façade Construction, Exterior Insulation & EIFS, Structural & Inplant Glazing

Intumescent Coatings, Fire Stopping

Seamless Resin Flooring, Subfloor Preparation, Car Parking Structures

Civil Engineering, Potable & Waste Water Industry, Balconies, Terraces, Basements & Foundations

Liquid Applied Systems, Felt Systems, Vegetated Roofing

Europe's leading construction products brands...

Construction
Products Group
Europe

Tremco CPG UK
Coupland Road, Hindley Green
Wigan WN2 4HT, United Kingdom

T. +44 (0)1942 251400
F. +44 (0)1942 251410
firesales@cpg-europe.com
www.nullifire.com

202304-V1